HAL
open science

# Regulation of the distance between the center of mass and the minimum moment axis for stabilized locomotion in humans

François Bailly, Bertrand Pinet, Philippe Souères, Bruno Watier

## To cite this version:

François Bailly, Bertrand Pinet, Philippe Souères, Bruno Watier. Regulation of the distance between the center of mass and the minimum moment axis for stabilized locomotion in humans. 2017. hal-01494117v1

**HAL Id: hal-01494117**

**https://laas.hal.science/hal-01494117v1**

Preprint submitted on 22 Mar 2017 (v1), last revised 17 Oct 2017 (v3)

**HAL** is a multi-disciplinary open access archive for the deposit and dissemination of scientific research documents, whether they are published or not. The documents may come from teaching and research institutions in France or abroad, or from public or private research centers.

L'archive ouverte pluridisciplinaire **HAL**, est destinée au dépôt et à la diffusion de documents scientifiques de niveau recherche, publiés ou non, émanant des établissements d'enseignement et de recherche français ou étrangers, des laboratoires publics ou privés.

# Regulation of the distance between the center of mass and the minimum moment axis for stabilized locomotion in humans

F. Bailly[a,b,*], B. Pinet[a], P. Souères[a], B. Watier[a,b]

[a] *LAAS-CNRS, 7 Avenue du Colonel Roche, F-31400 Toulouse, France*
[b] *University of Toulouse, UPS, LAAS, F-31400 Toulouse, France*

**Abstract**

This study aims at showing that, to ensure stability, humans tend to minimize the distance between their center of mass and the minimal moment axis of contact forces. This work is based on a theoretical reasoning in mechanics and on experiments in human walking movement. A destabilizing setup was built on which five different experiments were carried out by 15 volunteers. We computed the distance between the minimal moment axis of the contact forces and the center of mass of the participants. This distance significantly increased ($p < 0.001$, ranging from 55.1 mm to 150.9 mm) as subjects balance was perturbed through the five different conditions (walking on a destabilizing setup, increasing walking speed, grasping or not a fixed element). Furthermore, the analysis of each segment's position with regard to the studied axis shows that heaviest segments are kept close to it, while lightest segments are less constrained around it ($p < 0.001$, from 145.7 mm to 493.1 mm). This might reveal a strategy used to obtain a fine control of the center of mass distance from the axis and thus a good regulation of the variation of whole body angular momentum. Tracking this distance could be used for different purposes, such as fall detection, prosthesis studies and trajectory generation in humanoid robotics.

*Keywords:* Stability criterion, Center of pressure, Angular momentum, Balance, Locomotion

## 1. Introduction

Stability of human locomotion embodies a scientific challenge related to both biomechanics and humanoid robotics (Hof et al., 2005; Hurmuzlu et al., 2004). Researchers have widely used a geometric criterion, the Center of Pressure (CoP

*. Corresponding author
*Email address:* `fbailly@laas.fr` (F. Bailly)
*URL:* `http://projects.laas.fr/gepetto/index.php/Members/FrancoisBailly` (F. Bailly)

also named Zero Moment Point – ZMP by roboticists (Sardain and Bessonnet, 2004)) to evaluate the degree of instability during locomotion on horizontal walkways (Cavanagh and Lafortune, 1980; Vukobratović and Borovac, 2004). The CoP is the intersection of the locomotion plane and the axis along which the moment of the contact forces under the feet is collinear to the normal of the plane (Vukobratović and Borovac, 2004).

Several authors have suggested that locomotion becomes unstable when the CoP reaches the boundary of the support polygon of the contact surface between the biped and the plane of locomotion (Kajita et al., 2014). This criterion has been widely used by biomechanicists, to investigate gait control analysis (Collins and De Luca, 1993), running mechanics (Cavanagh and Lafortune, 1980), prosthesis, shoes design and fall detection (Fernie et al., 1982). In these approaches, authors have usually studied the CoP path during several tasks, which is considered to reflect information about neuromuscular control (Prieto et al., 1996). In humanoid robotics, researchers have also used CoP control to generate bipedal locomotion (Kajita et al., 2014). However, this criterion suffers from limitations as it is only defined when contacts are coplanar. Thus, this criterion becomes irrelevant when the motion involves multiple non coplanar contacts while this situation is common in everyday life (stairs climbing, door opening, elderly locomotion ...).

To overcome these limitations, several works have been proposed to expand the CoP criterion when locomotion is realized on uneven surfaces or when subjects use multi-contacts (cane, banister, etc.). Using a barycentric method weighted by contact surfaces slopes and forces applied under each foot, Sardain and Bessonnet (2004) have suggested to compute a virtual contact surface from which the CoP could be calculated, Harada et al. (2003) have proposed to compute a generalized CoP inside a virtual surface obtained by projecting the edges of the convex hull of the supporting contact points onto the floor, Hirukawa et al. (2006) have proposed that if the center of mass of the biped was inside the polyhedral convex cone of the contact wrench between the feet of a biped and its environment, its balance was assured. Although the last criterion was proven to be mathematically consistent, the geometrical complexity of these propositions makes them poorly intuitive for expressing a generalized criterion that might be used as a sensorimotor strategy for gait or locomotion balance control.

In this paper, we propose a study of locomotion stability based on a mechanical approach. This work is built on the computation of the wrench of contact forces. The key idea is to consider the central axis of this wrench along which the moment of the contact forces applied to the muskulo-skeletal system and the resultant of the contact forces are collinear. This axis is known as the set of points where the overall moment induced by contact forces is minimal regarding the Euclidean norm (2), and can always be computed even when walking is performed on uneven surfaces or involves multi contacts. The overall moment applied to the center of mass is also, according to Newton's first law, the variation of angular momentum at the center of mass, and thus reflects the body's angular acceleration around it. Within the scope of bipedal locomotion, being balanced meaning not to fall or not to tumble, it is intuitive to minimize this

quantity. Hence, in this work we propose to analyse the distance between the center of mass and the principal axis of the contact forces wrench during locomotion. We have hypothesized that this distance should significantly increase under perturbed balance conditions. In order to test this conjecture, we have set-up walking experiments to study five different locomotion tasks involving non coplanar and upper limbs contacts.

## 2. Theory

**Notations.** Global center of mass : $G$, central axis of contact forces wrench : $\Delta$, center of mass of the i-th segment : $G_i$, distance between $G$ and $\Delta$ : $d_{G-\Delta}$, distance between $G_i$ and $\Delta$ : $d_{G_i-\Delta}$.
Contact forces can be represented by a single vector $\mathbf{F^c}$. At any point $A$, $\mathbf{F^c}$ induces a moment $\mathbf{M^c_A}$. $\mathbf{F^c}$ and $\mathbf{M^c_A}$ define a moment field (that we call wrench) that is expressed at any point $P$ as :

$$\mathbf{M^c_P} = \mathbf{M^c_A} + \mathbf{F^c} \times \mathbf{AP} \tag{1}$$

It is well known that there exists one axis ($\Delta$) such that, at each point of this axis, the moment is parallel to $\mathbf{F^c}$ (Dimentberg, 1968). This axis, directed by $\mathbf{F^c}$, is the central axis of the contact force wrench. Without loss of generality, assuming that $A \in \Delta$, and taking the Euclidean norm of (1) yields :

$$||\mathbf{M^c_P}||_2^2 = ||\mathbf{M^c_A}||_2^2 + ||\mathbf{F^c} \times \mathbf{AP}||_2^2 + 2\ \mathbf{M^c_A} \cdot (\mathbf{F}^c \times \mathbf{AP}) \tag{2}$$

with $2\ \mathbf{M^c_A} \cdot (\mathbf{F}^c \times \mathbf{AP}) = 0$ (hypothetically the moment about $A$ is parallel to $\mathbf{F}^c$). This leads to the conclusion that, at any point P, $||\mathbf{M}^c_P||_2^2 \geq ||\mathbf{M}^c_A||_2^2$, reaching the equality when $P$ belongs to $\Delta$. Hence, the contact forces moment is minimal along the central axis. As mentioned previously, reducing $d_{G-\Delta}$ leads to minimize the variation of angular momentum applied at $G$. Thus, quantifying this distance turns out to be relevant when studying human locomotion stability.

## 3. Methods

### *3.1. Participants*

Fifteen healthy male subjects (25.6 ± 5.8 y, height 1.77 ± .035 m, body mass 73 ± 8 kg) volunteered for this investigation. The participants had no prior or existing injury or neurological disorder affecting gait. Each participant was informed of the experimental procedure and signed an informed consent form prior to the study. The experiment was conducted in accordance with the declaration of Helsinki (rev. 2013) with formal approval of the ethics evaluation committee (IRB00003888, Opinion number 13-124) of the Institut National de la Santé Et de la Recherche Médicale, INSERM, Paris, France.

### 3.2. Experimental protocol

Each participant had to execute different barefoot walking tasks under different stepping conditions and involving or not an additional hand contact. They realized three trials in five different experimental conditions. For each condition, two preliminary steps were achieved before crossing the force platform ($180 \times 90$ cm, AMTI, Watertown, MA, USA). Time intervals between repetitions were adjusted to prevent fatigue. For conditions involving non-coplanar contacts to be achieved, a custom made setup was built which consisted of four 35° sloped wooden blocks (i.e. three steps) fixed on the force platform embedded into the floor. A 6-component force sensor, hereafter called handlebar (∅42 mm SENSIX, Poitiers, France), was placed at 1.1 m high between blocks 2 and 3, which led to the wider step (see details Fig. 1).

In the first condition (cond. A), the volunteers were asked to walk through the horizontal force platform, at spontaneous speed without any obstacle.

After warming-up and getting familiarized with the setup, the participants were asked to cross the platform (left foot first), walking on the experimental setup for the four remaining conditions :

- Cond. B, at spontaneous speed, without handlebar
- Cond. C, at spontaneous speed, using the handlebar
- Cond. D, as fast as possible, without handlebar
- Cond. E, as fast as possible, using the handlebar

For conditions B, C, D and E, subjects were asked to cross the platform walking on the wooden blocks only, which were spaced in order to cause instability (Tab. 2). There was no randomization but the volunteers were asked to perform the tasks in order of increasing complexity (conditions A, C, B, E then D), so that a potential learning process would have tend to decrease the significance of our results. The protocol was not normalized to participants' specific attributes (size, weight, handedness), because the aim of the study was not to measure some absolute values of $d_{G-\Delta}$ under specific constraints but rather to compare relative results under different stability conditions.

### 3.3. Data acquisition

For 3-dimensional kinematic analysis, 47 reflective markers were fixed on the subject's bone landmarks for local frame reconstruction according to Wu et al. (2002, 2005). Data were recorded by thirteen optoelectronic cameras sampled at 200 Hz (VICON, Oxford's metrics, Oxford, UK). 3-dimensional contact forces and moments applied to the subject were provided by the force platform along with the handlebar, both sampled at 2 kHz. The handlebar was localized thanks to 3D reflective markers. Data were synchronized using Nexus 1.7.1 system (VICON, Oxford, United-Kingdom) and filtered using a 4th order, zero phase-shift, low-pass Butterworth with a 15 Hz cutoff frequency. Body segments masses and center of mass positions were calculated in accordance with Dumas et al. (2007) anthropometric tables. The acquisition procedure started when the right foot of the subject left the floor and stopped before the left foot reached the floor (in order to record full contact motions). A custom made program was written for data processing.

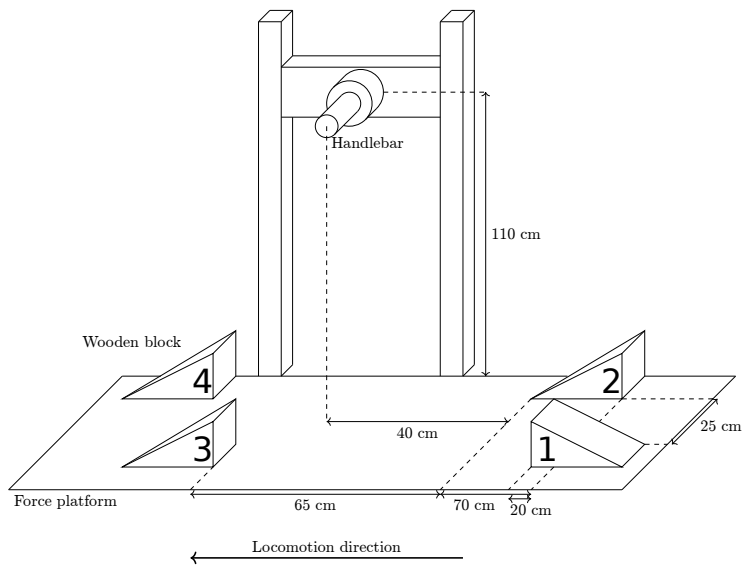


FIGURE 1: Experimental setup dimensions

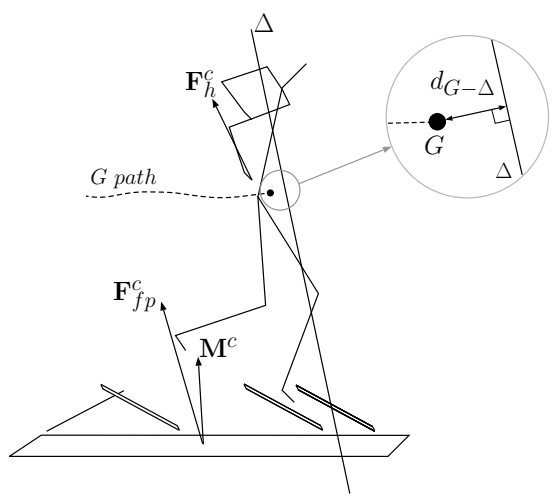


FIGURE 2: Data reconstruction. $\mathbf{F}_{fp}^c$ is the force recorded from the force platform, $\mathbf{F}_h^c$ is the force recorded from the handlebar, $\mathbf{M}^c$ is the global moment expressed at the center of the force platform. $\Delta$ is the central axis of the contact force wrench. The dashed curved line is the path of $G$ in time. The skeleton is displayed by linking the center-of-mass positions of each segment. $d_{G-\Delta}$ is highlighted in the magnified portion of the image and is computed thanks to (4).

### 3.4. Data reduction and analysis

The central axis of the contact force wrench ($\Delta$) was computed thanks to the approach proposed by Shimba (1984) (Fig. 2) :

$$\forall M \text{ in space, } \forall I \in \Delta,\ \mathbf{MI} = \frac{\mathbf{F^c} \times \mathbf{M^c_M}}{||\mathbf{F^c}||^2} + \lambda \mathbf{F^c},\ \lambda \in \mathbb{R} \tag{3}$$

The distance $d_{G-\Delta}$ between this axis directed by $\mathbf{F^c}$ and the center of mass ($G$) of the subject was computed according to the projection of a point on a line formula :

$$\forall I \in \Delta,\ d_{G-\Delta} = \frac{\mathbf{IG} \times \mathbf{F^c}}{||\mathbf{F^c}||} \tag{4}$$

For each locomotion session, the variation of this distance in time was evaluated and the same adapted formula was used to compute the distances ($d_{G_i-\Delta},\ i \in [1, 15]$) of each segment's center of mass to the central axis (Head & neck, torso, pelvis, thighs, legs, feet, arms, forearms, hands).

### 3.5. Statistics

The average $d_{G-\Delta}$ was computed for each subject under each condition. Before statistical tests, data normality was assessed using the Kolmogorov-Smirnov's test. Two separate one-way repeated measure ANOVAs were performed to compare the mean distance and the locomotion speed across conditions ($p < 0.001$) each followed by ten paired t-tests with the Bonferroni correction ($p < 0.05/10$) to assess the effect of each protocol on the measured $d_{G-\Delta}$ and to verify if speed instructions significantly modified subjects locomotion speed. A third one-way repeated measure ANOVA was performed ($p < 0.001$), to compare the $d_{G_i-\Delta},\ i \in [1, 15]$. 105 paired t-test with the Bonferroni correction ($p < 0.05/105$) were then applied to check for the pairwise significance of this result. The global hypothesis was accepted if the mean of $d_{G-\Delta}$ significantly increased as the stability of the subject was put at risk (by order of increasing destabilisation : conditions A, C, B, E then D).

## 4. Results

Locomotion velocity and $d_{G-\Delta}$ are shown in Tab. 2. Our results reveal that subject's locomotion in conditions B and C was significantly slower than in conditions A, D and E (about twice), and conditions D and E were significantly faster than condition A. Paired t-tests reveal that $d_{G-\Delta}$ in B tested against C cannot be said to be significantly different (Tab. 2). Every other figure in Tab. 2 shows that the mean distance significantly increases across the different conditions (ranging from 55.1 mm to 150.9 mm, by order of increasing distance : A,C-B,E then D).

The distance between $\Delta$ and each segment's c for condition D is presented in Fig. 3 and the significance of the results for each condition is highlighted in Tab.

3. One can notice that, as the i-th segment body mass contribution increases, $d_{G_i-\Delta}$ decreases. For instance, the hands which account for 0.6% of the body mass are on average at more than 400 mm from the axis, whereas the torso which account for 33.3% of the body mass is on average 145.7 mm away, for condition D. Our results especially reveal that only the pelvis and torso distances to $\Delta$ cannot be said to be significantly different from the global center of mass one.

Fig. 4 shows $d_{G-\Delta}$ for the three trials of one subject, in condition A. Fig. 4b shows the height of one of the right and left toes markers. Their profiles allow for indentification of the different phases of the walking cycle (left and right swings, double support). They are exhibited to analyse the time evolution of the distance displayed above (Fig. 4a). During double support phases, $d_{G-\Delta}$ decreases (Fig. 4a), while it increases during right and left swing phases (from less than 10 mm up to more than 120 mm).

| Task | Standard walking | Walking on setup | | Walking on setup using handlebar | |
|---|---|---|---|---|---|
| Speed | Spontaneous | Spontaneous | Fast | Spontaneous | Fast |
| Condition | A | B | D | C | E |
| $d_{G-\Delta}$ $(mm)$ | $55.1 \pm 6.2$ | $(74.8 \pm 14.2)^\star$ | $150.9 \pm 34.4$ | $69.6 \pm 13.5$ | $123.8 \pm 25.1$ |
| Average speed $(m.s^{-1})$ | $1.0 \pm 0.15$ | $(0.71 \pm 0.24)^\star$ | $(1.4 \pm 0.35)^\dagger$ | $0.73 \pm 0.21$ | $1.5 \pm 0.32$ |

Table 1: Distances between the central axis of contact forces wrench and $G$, and average locomotion speeds across conditions A, B, C, D and E. Data are expressed as mean ± SD. Superscript $\star$ (resp. †) stands for "Not significantly different from conditions C (resp. E)".

| Condition | E | A | B | C |
|---|---|---|---|---|
| A | $3.9 \times 10^{-07}$ | - | - | - |
| B | $1.5 \times 10^{-05}$ | $3.3 \times 10^{-04}$ | - | - |
| C | $1.4 \times 10^{-05}$ | $3.5 \times 10^{-03}$ | **0.27** | - |
| D | 0.042 | $3.0 \times 10^{-07}$ | $3.3 \times 10^{-04}$ | $8.6 \times 10^{-07}$ |

Table 2: P-values of the ten paired t-tests with the Bonfferroni correction for $d_{G-\Delta}$ for the five conditions. Values (p*10) must be below 0.05 to be significant. Figures in bold represent non significant comparisons.

## 5. Discussion

On account of a mechanical argument, we have measured $d_{G-\Delta}$, and we claim that it could constitute a key element in the study of human locomotion stability. We have shown theoretically that the regulation of this distance leads

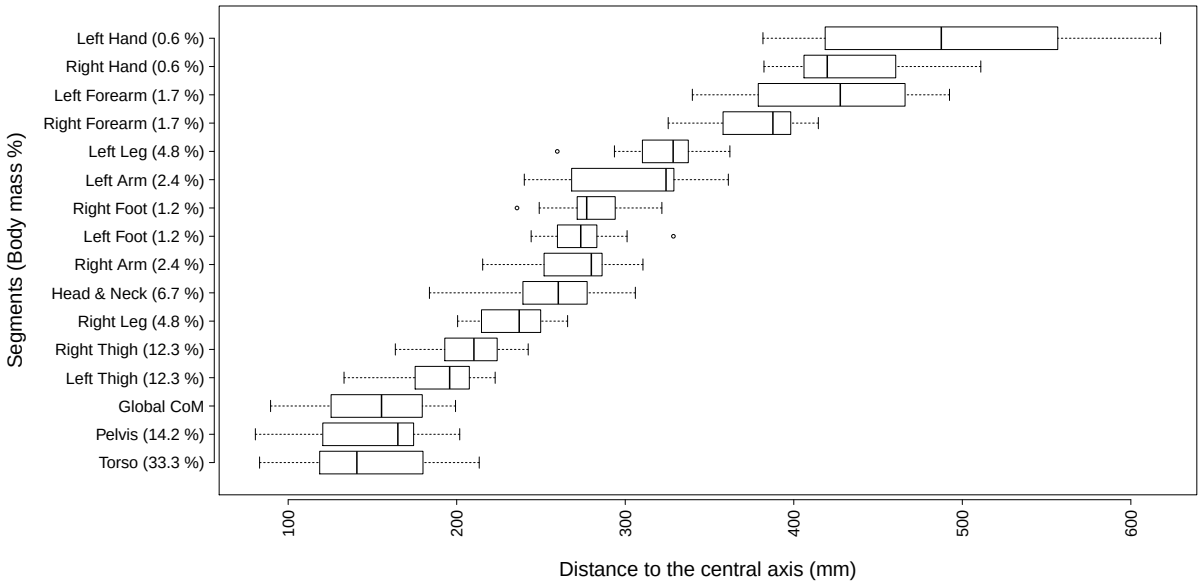


FIGURE 3: Box plot depicting the distances between the central axis of contact force wrench and the center of mass of each segment ($d_{G_i-\Delta}$) for condition D, sorted by increasing mean. The bold lines within the plot represent the median value of the data, the boxes encompass 50% of the data and the protruding bars encompass the remainder of the data, with the exception of outliers which are depicted with circles.

to the control of the variation of angular momentum applied to the center of mass. Our experimental results have clearly corroborated this mechanical statement. This criterion can be computed in any condition (non-coplanar and/or multi contact), contrary to the CoP criterion which can be used in the case of coplanar contacts only. The angular momentum has already been widely studied to quantify locomotion stability (Popovic et al., 2004; Pijnappels et al., 2004; Bennett et al., 2010) and it is proposed to be regulated by the central nervous system via the control of the position of the center of mass and the ground reaction forces (Herr and Popovic, 2008; Neptune and McGowan, 2011). In this study, we propose a new interpretation of the center of mass position with regard to the minimum moment axis given the external efforts applied to the biped.

At first glance, this study reveals that, compared to standard barefoot locomotion, asking the subject to walk on the destabilizing setup noticeably increased the measured distance (cond. A against B, C, D and E).

Lamont and Zehr (2007) and Reid et al. (2011) studies suggest that holding a

| | $d_{G_i-\Delta}$ (mm) in condition | | | | |
|---|---|---|---|---|---|
| Segments | A | B | C | D | E |
| (a) Torso | $(46.6 \pm 8.2)^{b}$ | $(61.8 \pm 15)^{b}$ | $(64.2 \pm 15)^{b,c}$ | $(145.8 \pm 40)^{b,c}$ | $(121.1 \pm 27)^{b,c}$ |
| (b) Pelvis | $37.3 \pm 8.6$ | $61.9 \pm 19$ | $(59.4 \pm 20)^{c}$ | $(147.4 \pm 37)^{c}$ | $(122.7 \pm 31)^{b}$ |
| (c) Global center of mass | $55.1 \pm 6.1$ | $74.8 \pm 14$ | $69.6 \pm 14$ | $150.9 \pm 34$ | $123.8 \pm 25$ |
| (d) Left thigh | $(125.7 \pm 13)^{e,f,g}$ | $(151.4 \pm 11)^{e}$ | $155.7 \pm 16$ | $(190.6 \pm 25)^{e}$ | $(199.2 \pm 34)^{e,f}$ |
| (e) Right thigh | $(129.0 \pm 12)^{g}$ | $168.0 \pm 12$ | $(147.1 \pm 13)^{d}$ | $207.3 \pm 23$ | $174.4 \pm 14$ |
| (f) Right leg | $(157.2 \pm 22)^{l}$ | $210.4 \pm 19$ | $(206.7 \pm 21)^{g,k}$ | $(233.8 \pm 21)^{g}$ | $(230.1 \pm 17)^{g,k}$ |
| (g) Head & neck | $(137.4 \pm 28)^{f,l}$ | $(199.0 \pm 27)^{f,h}$ | $(218.7 \pm 31)^{k,l}$ | $(258.7 \pm 32)^{h,i}$ | $(254.1 \pm 37)^{h,k,l}$ |
| (h) Right arm | $(191.3 \pm 15)^{i,j,k}$ | $(209.1 \pm 20)^{f,k}$ | $(252.0 \pm 26)^{i,l}$ | $(269.2 \pm 26)^{i,j,k}$ | $273.4 \pm 22)^{i,k,l}$ |
| (i) Left foot | $(211.5 \pm 25)^{j,k}$ | $(276.7 \pm 17)^{l}$ | $(279.7 \pm 17)^{j,n}$ | $(274.3 \pm 22)^{j,k}$ | $(307.0 \pm 23)^{j,k,l}$ |
| (j) Right foot | $(225.4 \pm 31)^{k}$ | $(270.3 \pm 25)^{i,l}$ | $(288.5 \pm 26)^{n}$ | $(281.5 \pm 23)^{k}$ | $(312.2 \pm 30)^{l,k}$ |
| (k) Left arm | $207.3 \pm 12$ | $238.7 \pm 21$ | $211.3 \pm 16$ | $(303.5 \pm 41)^{l}$ | $268.6 \pm 36$ |
| (l) Left leg | $(176.0 \pm 27)^{h,j,k}$ | $(291.6 \pm 20)^{m,n}$ | $(270.6 \pm 24)^{i,j,l}$ | $324.0 \pm 26$ | $(318.2 \pm 46)^{m}$ |
| (m) Right forearm | $269.0 \pm 15$ | $(330.3 \pm 27)^{n}$ | $(373.6 \pm 34)^{p}$ | $(379.0 \pm 26)^{n}$ | $(383.7 \pm 31)^{n}$ |
| (n) Left forearm | $(267.2 \pm 19)^{m}$ | $347.8 \pm 43$ | $326.4 \pm 43$ | $(421.4 \pm 50)^{o}$ | $(409.0 \pm 44)^{o}$ |
| (o) Right hand | $(320.0 \pm 22)^{p}$ | $(396.3 \pm 43)^{p}$ | $(431.2 \pm 39)^{p}$ | $(434.9 \pm 41)^{p}$ | $(424.7 \pm 42)^{p}$ |
| (p) Left hand | $322.2 \pm 37$ | $427.6 \pm 73$ | $408.2 \pm 70$ | $493.2 \pm 76$ | $509.6 \pm 67$ |

Table 3: Distance between the central axis of contact forces wrench and the center of mass of each segment for condition A,B,C,D and E sorted by increasing mean in condition D. Data are expressed as mean ± SD. Superscript a (resp. b,c,d,e,f,g,h,i,j,k,l,m,n,o,p) stands for "Not significantly different from torso (resp. pelvis, global center of mass, left thigh, right thigh, right leg, head & neck, right arm, left foot, right foot, left arm, left leg, right forearm, left forearm, right hand et left hand)".

fixed element during locomotion or stair ascent and descent slightly improves stability and balance confidence. Although we cannot say if, at spontaneous speed, using the handlebar changes the average $d_{G-\Delta}$ or not, in this study, at high speed, when subjects are allowed to stabilize themselves using the handlebar (cond. E), the distance significantly decreases in comparison with the corresponding condition at the same speed but without the handlebar (cond. D). This shows that $d_{G-\Delta}$ seems appropriate to reflect the stability of human locomotion.

Statistical results show that the speed instructions significantly modified the locomotion speed of the subjects. When subjects are asked to cross the platform at high speed (conds. D and E), $d_{G-\Delta}$ increases in comparison with the corresponding conditions at spontaneous speed (conds. B and C). Dingwell and

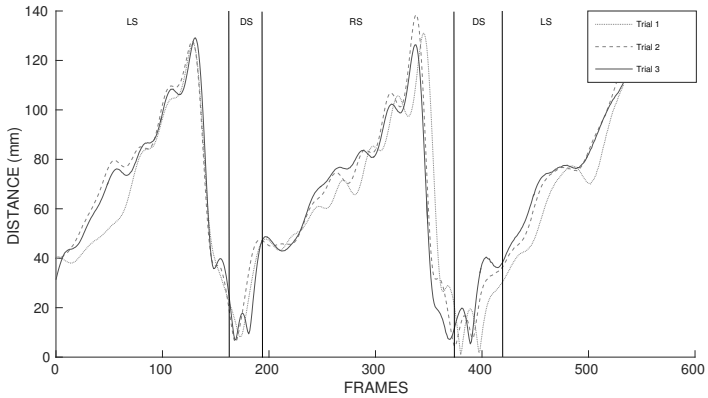


(a)

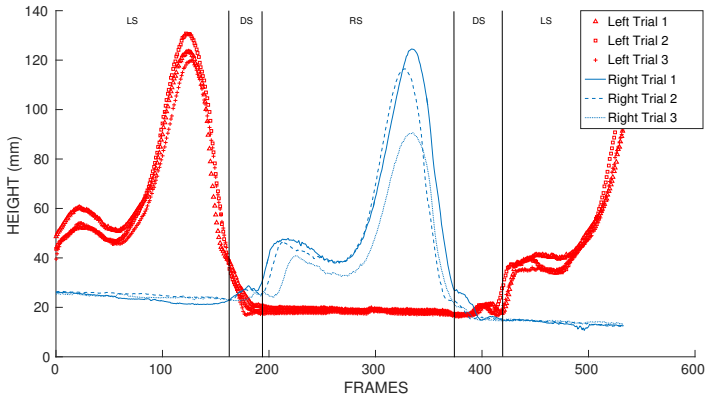


(b)

FIGURE 4: $d_{G-\Delta}$ (mm) of one subject during walk, for 3 trials : 4a. Height (z component) of left (blue) and right (red) toe markers (mm) of one subject during walk, for 3 trials : 4b. LS = Left Swing, DS = Double Support, RS = Right Swing. Extracted from cond. A for one subject.

Marin (2006) and Kang and Dingwell (2008) have shown that in young and older adults, dynamic stability can be improved by walking slower, therefore speed is a destabilizing parameter. The present study shows that $d_{G-\Delta}$ significantly increases with locomotion speed, which makes it a good indicator for stability. Along the same line, subjects with poor balance are associated with longer double support phases (Mancini and Horak, 2010). This is certainly because double support provides a better control of the reaction forces acting on the walker than single support. Looking at the scale of the walking cycle, the most stable stages (double support) lead to a low $d_{G-\Delta}$, whereas left and right swings lead to an increase of this distance. This suggests that the dynamic evolution

of the proposed criterion can be used in several applications like fall detection. One can sum up these several results as follow : the more stable, the closer the center of mass to $\Delta$. Furthermore, this study draws a preliminary answer to the question of the gait control strategy which leads to this result. As Fig. 3 and Tab. 3 show, for lightweight segments, large excursions from $\Delta$ are tolerated (hands, forearms...), while heaviest segments are kept closed to it (torso, pelvis, thighs...). This trend is consistent with our hypothesis and it may reveal a motor control strategy for placing segments relatively to the axis, according to their inertias. Driving lightweight segments away from $\Delta$ to get a fine control of the global center of mass position seems to be a good strategy which echoes the one used by tightropes and slacklines walkers. This strategy is not just a matter of static positioning but rather a highly dynamical approach, since it tends to minimize the variation of angular momentum applied to $G$ and therefore, the angular acceleration of the body around it.

It is worth mentioning that our study relies on the accuracy of markers placement to estimate segments centers of rotation and on anthropometric tables which are not fitted to each subject, resulting in an estimation error for the position of the center of mass (Rao et al., 2006; Kiernan et al., 2014). This error is increased by soft tissue artifacts (Peters et al., 2010). A limitation of the proposed criterion is that, as soon as contacts are lost (dynamic jumping motions), the measured distance is zero (which is consistent with the conservation of angular momentum), and that indicates a stable motion whatever is happening in the air. Another drawback of this work lies in the fact that it needs full body motion capture to be recorded, whereas other criteria such as CoP only need forces and moments applied to the subject to be recorded. Caron et al. (1997) proposed a simplified way derived from the CoP position, to measure position of $G$ in standing posture that could be adapted to more general motions and thus simplify the acquisition of $d_{G-\Delta}$.

In humanoid robotics however, where inertias of each segment are exactly known along with joints positions, the center of mass position can precisely be computed and our criterion can easily be calculated and regulated as part of a cost function for human inspired and stable trajectory generation. Future work can now be achieved to study and quantify stability in specific populations (elderly, athletes, etc.).

## 6. Conflict of interest statement

There is no conflict of interest regarding the publication of this manuscript.

## 7. Acknowledgement

We thank the volunteers who took part in the experiment. We warmly thank Dr. Robin Baurès, associate professor at the University of Toulouse for helping us with the statistics. The work is supported by the European Research Council through the Actanthrope project (ERC Grant Agreement 340050) and the

French National Research Agency project ENTRACTE (ANR Grant Agreement 13-CORD-002-01).

## References


Bennett, B.C., Russell, S.D., Sheth, P., Abel, M.F., 2010. Angular momentum of walking at different speeds. Human movement science 29, 114–124.

Caron, O., Faure, B., Brenière, Y., 1997. Estimating the centre of gravity of the body on the basis of the centre of pressure in standing posture. Journal of biomechanics 30, 1169–1171.

Caron, S., Pham, Q.C., Nakamura, Y., 2015. Leveraging cone double description for multi-contact stability of humanoids with applications to statics and dynamics, in : Robotics : Science and System.

Carpentier, J., Benallegue, M., Mansard, N., Laumond, J.P., 2015. A kinematics-dynamics based estimator of the center of mass position for anthropomorphic system - A complementary filtering approach, in : IEEE (Ed.), 2015 IEEE-RAS International Conference on Humanoid Robots, Seoul, South Korea. pp. 1121 – 1126. URL : `https://hal.archives-ouvertes.fr/hal-01175592`, doi :`10.1109/HUMANOIDS.2015.7363493`.

Cavanagh, P.R., Lafortune, M.A., 1980. Ground reaction forces in distance running. Journal of Biomechanics 13, 397–406. doi :`10.1016/0021-9290(80)90033-0`.

Collins, J.J., De Luca, C.J., 1993. Open-loop and closed-loop control of posture : a random-walk analysis of center-of-pressure trajectories. Exp Brain Res 95, 308–318.

Dimentberg, F.M., 1968. The screw calculus and its applications in mechanics. Technical Report. DTIC Document.

Dingwell, J.B., Marin, L.C., 2006. Kinematic variability and local dynamic stability of upper body motions when walking at different speeds. Journal of biomechanics 39, 444–452.

Dumas, R., Cheze, L., Verriest, J.P., 2007. Adjustments to McConville et al. and Young et al. body segment inertial parameters. Journal of biomechanics 40, 543–553.

Ehrig, R.M., Taylor, W.R., Duda, G.N., Heller, M.O., 2006. A survey of formal methods for determining the centre of rotation of ball joints. Journal of biomechanics 39, 2798–2809.

England, S.A., Granata, K.P., 2007. The influence of gait speed on local dynamic stability of walking. Gait & posture 25, 172–178.

Fernie, G.R., Gryfe, C.I., Holliday, P.J., Llewellyn, A., 1982. The relationship of postural sway in standing to the incindence of falls in geriatric subjects. Age and Ageing 11, 11–16. doi :`10.1093/ageing/11.1.11`.

Harada, K., Kajita, S., Kaneko, K., Hirukawa, H., 2003. Zmp analysis for arm/leg coordination, in : Intelligent Robots and Systems, 2003. (IROS 2003). Proceedings. 2003 IEEE/RSJ International Conference on, pp. 75–81. doi :10.1109/IROS.2003.1250608.

Herr, H., Popovic, M., 2008. Angular momentum in human walking. Journal of Experimental Biology 211, 467–481.

Hirukawa, H., Shizuko, H., Harada, K., Kajita, S., Kaneko, K., Kanehiro, F., Fujiwara, K., Morisawa, M., 2006. A universal stability criterion of the foot contact of legged robots - adios zmp, in : In IEEE International Conference on Robotics and Automation, pp. 1976–1983.

Hof, A.L., J., G.M.G., E., S.W., 2005. The condition for dynamic stability. Journal of Biomechanics 38, 1 – 8. doi :http://dx.doi.org/10.1016/j.jbiomech.2004.03.025.

Hurmuzlu, Y., Génot, F., Brogliato, B., 2004. Modeling, stability and control of biped robots—a general framework. Automatica 40, 1647–1664.

Kajita, S., Hirukawa, H., Harada, K., Yokoi, K., 2014. Introduction to Humanoid Robotics. Springer Tracts in Advanced Robotics, Springer Berlin Heidelberg. URL : https://books.google.fr/books?id=guIkBAAAQBAJ.

Kang, H.G., Dingwell, J.B., 2008. Effects of walking speed, strength and range of motion on gait stability in healthy older adults. Journal of biomechanics 41, 2899–2905.

Kiernan, D., Walsh, M., O'Sullivan, R., O'Brien, T., Simms, C.K., 2014. The influence of estimated body segment parameters on predicted joint kinetics during diplegic cerebral palsy gait. Journal of biomechanics 47, 284–288.

Lamont, E.V., Zehr, E.P., 2007. Earth-referenced handrail contact facilitates interlimb cutaneous reflexes during locomotion. Journal of neurophysiology 98, 433–442.

Mancini, M., Horak, F.B., 2010. The relevance of clinical balance assessment tools to differentiate balance deficits. European journal of physical and rehabilitation medicine 46, 239.

Neptune, R.R., McGowan, C.P., 2011. Muscle contributions to whole-body sagittal plane angular momentum during walking. Journal of biomechanics 44, 6–12.

Peters, A., Galna, B., Sangeux, M., Morris, M., Baker, R., 2010. Quantification of soft tissue artifact in lower limb human motion analysis : a systematic review. Gait & posture 31, 1–8.

Pijnappels, M., Bobbert, M.F., van Dieën, J.H., 2004. Contribution of the support limb in control of angular momentum after tripping. Journal of biomechanics 37, 1811–1818.

Popovic, M., Hofmann, A., Herr, H., 2004. Angular momentum regulation during human walking : biomechanics and control, in : Robotics and Automation, 2004. Proceedings. ICRA'04. 2004 IEEE International Conference on, IEEE. pp. 2405–2411.

Prieto, T.E., Myklebust, J.B., Hoffmann, R.G., Lovett, E.G., Myklebust, B.M., 1996. IEEE Transactions on biomedical engineering 43, 956–966. doi :10.1109/10.532130.

Rao, G., Amarantini, D., Berton, E., Favier, D., 2006. Influence of body segments' parameters estimation models on inverse dynamics solutions during gait. Journal of Biomechanics 39, 1531–1536.

Reid, S.M., Novak, A.C., Brouwer, B., Costigan, P.A., 2011. Relationship between stair ambulation with and without a handrail and centre of pressure velocities during stair ascent and descent. Gait & posture 34, 529–532.

Sardain, P., Bessonnet, G., 2004. Forces acting on a biped robot. center of pressure-zero moment point. Trans. Sys. Man Cyber. Part A 34, 630–637. URL : http://dx.doi.org/10.1109/TSMCA.2004.832811, doi :10.1109/TSMCA.2004.832811.

Shimba, T., 1984. An estimation of center of gravity from force platform data. Journal of Biomechanics 17, 53–60.

Vukobratović, M., Borovac, B., 2004. Zero-moment point — thirty five years of its life. International Journal of Humanoid Robotics 01, 157–173. doi :10.1142/S0219843604000083.

Wu, G., Van der Helm, F.C., Veeger, H.D., Makhsous, M., Van Roy, P., Anglin, C., Nagels, J., Karduna, A.R., McQuade, K., Wang, X., et al., 2005. Isb recommendation on definitions of joint coordinate systems of various joints for the reporting of human joint motion—part ii : shoulder, elbow, wrist and hand. Journal of biomechanics 38, 981–992.

Wu, G., Siegler, S., Allard, P., Kirtley, C., Leardini, A., Rosenbaum, D., Whittle, M., D'Lima, D.D., Cristofolini, L., Witte, H., et al., 2002. Isb recommendation on definitions of joint coordinate system of various joints for the reporting of human joint motion—part i : ankle, hip, and spine. Journal of biomechanics 35, 543–548.