HAL open science

Exponential Lyapunov Stability Analysis of a Drilling Mechanism

Matthieu Barreau, Alexandre Seuret, Frédéric Gouaisbaut

To cite this version:

Matthieu Barreau, Alexandre Seuret, Frédéric Gouaisbaut. Exponential Lyapunov Stability Analysis of a Drilling Mechanism. 2018. hal-01725416v1

HAL Id: hal-01725416

https://laas.hal.science/hal-01725416v1

Preprint submitted on 7 Mar 2018 (v1), last revised 5 Sep 2018 (v3)

HAL is a multi-disciplinary open access archive for the deposit and dissemination of scientific research documents, whether they are published or not. The documents may come from teaching and research institutions in France or abroad, or from public or private research centers.

L'archive ouverte pluridisciplinaire **HAL**, est destinée au dépôt et à la diffusion de documents scientifiques de niveau recherche, publiés ou non, émanant des établissements d'enseignement et de recherche français ou étrangers, des laboratoires publics ou privés.

Copyright

Exponential Lyapunov Stability Analysis of a Drilling Mechanism

Matthieu Barreau, Alexandre Seuret and Frédéric Gouaisbaut

***Abstract*—This article deals with the stability analysis of a drilling system which is modelled as a coupled ordinary differential equation / string equation. The string is damped at the two boundaries but leading to a stable open-loop system. The aim is to derive a linear matrix inequality ensuring the exponential stability with a guaranteed decay-rate of this interconnected system. A strictly proper dynamic controller based on boundary measurements is proposed to accelerate the system dynamics and its effects are investigated through the stability theorem and simulations. It results in an efficient finite dimension controller which subsequently improves the system performances.**

I. Introduction

Many physical situations like string-payloads [13] or drilling systems [6] are modeled by infinite dimensional systems. They are, in their fundamentals, related to a Partial Differential Equation (PDE) and consequently, their stability analysis and control are not straightforward and has been under active research during the last decade.

A drilling mechanism is within this class of systems. It is used in the industry to pump oil deep in the soil. This physical system is subject to torsion and radial deformation due to the torque applied on one boundary of the pipe. This system is usually modeled by a coupled Ordinary Differential Equation (ODE) / string equation. These heterogeneous equations appear naturally when the torsional motion of the pit is coupled with the axial deformation of the pipe [7]. Moreover, as there is friction all along the pipe, it leads to a complex system made up of two non-linear equations. The commonly used methodology to control this system is the backstepping.

The aim is to use a control to transform the problem into a target system with the desired properties. Then, using a Lyapunov approach for example, the stability can be proven. This has been widely used in [6], [14], [15], [23]. There are many advantages because it provides a Lyapunov functional useful for a robustness analysis for example but it also provides a very accurate control as it mostly depends on the target system. But the calculations are tedious and lead to an infinite dimension control law which may be subjected to implementation issues.

Coming from the stability analysis of time-delay systems, a new method based on Linear Matrix Inequalities (LMIs) seems to be promising. As time-delay systems are a particular case of infinite dimension systems [11], it is possible to extend the methodology described in [21] to other systems. It relies on a Lyapunov functional and a state extension using projections of the infinite dimensional state on a basis of orthonormal polynomials. It has been successfully applied to transport equations in [18], to the heat equation [4] and to the wave equation also [2].

In this paper, we focus on the exponential stability analysis of a linearized drilling mechanism as described in [19] with the previous methodology. First, we explain the problem and discuss the existence of a solution. Then, an exponential stability result is provided. The theorem ensures the exponential stability with a guaranteed decay-rate. Some necessary conditions are drawn from the LMI condition and then, an example using physical values is provided. A control law is also derived to show the effectiveness of the method.

Notations: In this paper, $\mathbb{R}^+ = [0, +\infty)$ and $(x,t) \mapsto u(x,t)$ is a multi-variable function from $[0,1] \times \mathbb{R}^+$ to $\mathbb{R}$. The notation u_t stands for $\frac{\partial u}{\partial t}$. We also use the notations $L^2 = L^2((0,1);\mathbb{R})$ and for the Sobolov spaces: $H^n = \{z \in L^2; \forall m \leqslant n, \frac{\partial^m z}{\partial x^m} \in L^2\}$. The norm in L^2 is $\|z\|^2 = \int_\Omega |z(x)|^2 dx = \langle z, z\rangle$. For any square matrices A and B, the operations 'He' and 'diag' are defined as follow: $\mathrm{He}(A) = A + A^\top$ and $\mathrm{diag}(A,B) = \left[\begin{smallmatrix} A & 0 \\ 0 & B \end{smallmatrix}\right]$. A positive definite matrix $P \in \mathbb{R}^{n\times n}$ belongs to the set $\mathbb{S}^n_+$ or more simply $P \succ 0$.

II. Problem Statement

A. Modeling of the drilling process

A drilling mechanism was first modeled in [10] using the work of [7]. This phenomenon described in Figure 1 is the result of a coupling between a radial deformation and an axial movement. This coupling was later modeled in [19], [20] by the following nonlinear model:

$$\begin{cases} z_{tt}(x,t) = c^2 z_{xx}(x,t) - d z_t(x,t), & x \in (0,1), t \geq 0, \\ z_x(0,t) = g\left(z_t(0,t) - u_1(t)\right), & t \geq 0, \\ z_x(1,t) = -h z_{tt}(1,t) - k z_t(1,t) & \\ \qquad\qquad -q T_{nl}(z_t(1,t)), & t \geq 0, \\ \dot{Y}(t) = AY(t) + Bu_2(t) & \\ \qquad +E_1 z_t(1,t) + E_2 T_{nl}(z_t(1,t)), & t \geq 0, \end{cases} \tag{1}$$

with initial condition $z(\cdot,0) = z^0$, $z_t(\cdot,0) = z_t^0$ on $(0,1)$ and $Y(0) = Y^0$. In this model, z is the twist angle and it propagates along the pipe following a damped wave equation of speed c and internal damping d. Since the internal damping stabilizes the system, in this study, we consider the worst case scenario with $d = 0$ like in [10]. There are two boundary conditions at $x = 0$ and $x = 1$. At $x = 0$, a rotary table whose speed is controlled by the input u_1 allows to twist the pipe. Furthermore, there is an elastic connection between the rotary table and the beginning of the pipe. Due to this not rigid connection, there is a boundary damping with a coefficient g

M. Barreau, A. Seuret, F. Gouaisbaut are with LAAS - CNRS, Université de Toulouse, CNRS, UPS, France e-mail: (mbarreau,aseuret,fgouaisb@laas.fr).

This work is supported by the ANR project SCIDiS contract number 15-CE23-0014.

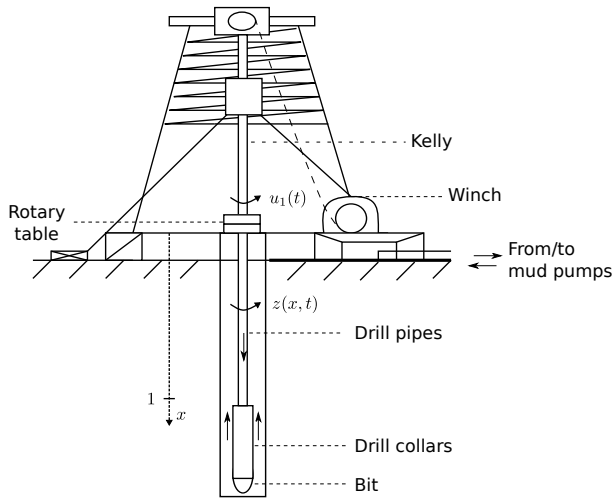

Fig. 1. Schematic of a drilling mechanism originally taken from [20]. Data corresponding to physical vaues are given in Table I.

at $x = 0$.

The drilling pit is located at $x = 1$. When drilling, an external torque applies at this boundary and the momentum equation leads to a second order in time boundary condition. The term T_{nl} is a non-linear function related to the change of torque and given below. To simplify the system as done in [10], we consider the equation at the bottom of the pipe to be only a first order boundary damping, then $h = 0$.

Finally, the last finite dimensional equation is related to the axial deformation of the pipe. Indeed, $Y(t) = [y(t) - \Gamma_0 t \;\; \dot{y}(t) - \Gamma_0]^\top \in \mathbb{R}^2$ with y the axial bit position and Γ_0 is the rate of penetration. This equation is a damped harmonic oscillator due to the axial extension of the pipe.

The parameters $c, g, k, q, A_{21}, A_{22}, b, e_1$ and e_2 are physical parameters given in [20] and reported in Table I. The matrices have the following structure:

$$A = \begin{bmatrix} 0 & 1 \\ A_{21} & A_{22} \end{bmatrix}, \quad B = \begin{bmatrix} 0 \\ b \end{bmatrix}, \quad E_1 = \begin{bmatrix} 0 \\ e_1 \end{bmatrix}, \quad E_2 = \begin{bmatrix} 0 \\ e_2 \end{bmatrix}.$$

The aim is to design control laws u_1 and u_2 such that the speed angle $z_t(1,t)$ in system (4) converges to Ω_e and Y to 0. Without loss of generality, we assume $\Omega_e > 0$.

In [7], [20], the nonlinear part of the torque is described by the following equations:

$$\begin{cases} T_{nl}(x) = W_{ob} R_b \mu_b(x) \operatorname{sign}(x), \\ \mu_b(x) = \mu_{cb} + (\mu_{sb} - \mu_{cb})\, e^{-\gamma_b |x|}. \end{cases} \tag{2}$$

Considering the overshoot on the variable $z_t(1,t)$, then $\frac{z_t(1,t)}{\Omega_e}$ is small, the following approximation of T_{nl} is proposed:

$$T_{nl}(z_t(1,t)) \simeq W_{ob} R_b \mu_{sb} \frac{z_t(1,t)}{\Omega_e}. \tag{3}$$

That leads to an approximated linear system defined for $t \geqslant 0$ with the same initial conditions:

$$\begin{cases} w_{tt}(x,t) = c^2 w_{xx}(x,t), & x \in (0,1), \\ w_x(0,t) = g\left(w_t(0,t) - u_1(t)\right), \\ w_x(1,t) = -(k + qW_{ob}R_b\mu_{sb}\Omega_e^{-1}) w_t(1,t), \\ \dot{Y}(t) = AY(t) + Bu_2(t) \\ \qquad\qquad + (E_1 + W_{ob}R_b\mu_{sb}\Omega_e^{-1}E_2) w_t(1,t). \end{cases} \tag{4}$$

It is possible to use the Riemann coordinates to simplify the writing of this system using the following variable: $\chi(x,t) = \begin{bmatrix} w_t(x,t) + c w_x(x,t) \\ w_t(1-x,t) - c w_x(1-x,t) \end{bmatrix}$. The system becomes for $t \geqslant 0$:

$$\begin{cases} \chi_t(x,t) = c\chi_x(x,t), \qquad x \in (0,1), \\ \begin{bmatrix} 1-cg & 0 \\ 0 & 1-c\tilde{k} \end{bmatrix} \chi(0,t) = \begin{bmatrix} 0 & 1+cg \\ 1+c\tilde{k} & 0 \end{bmatrix} \chi(1,t) - \begin{bmatrix} 2cgu_1(t) \\ 0 \end{bmatrix}, \\ \dot{Y}(t) = AY(t) + Bu_2(t) + \tilde{E}_1 \begin{bmatrix} \chi^\top(0,t) & \chi^\top(1,t) \end{bmatrix}^\top, \end{cases} \tag{5}$$

with $\tilde{k} = k + qW_{ob}R_b\mu_{sb}\Omega_e^{-1}$ and $\tilde{E}_1 = \frac{1}{2}(E_1 + W_{ob}R_b\mu_{sb}\Omega_e^{-1}E_2) \begin{bmatrix} 0 & 1 & -1 & 0 \end{bmatrix}$. The stability of system (5) implies the stability of (4) and then the study focuses more on system (5).

Assuming there is an equilibrium point, the equilibrium $x \mapsto \chi^e(x) = \begin{bmatrix} w_t^e(x) + c w_x^e(x) \\ w_t^e(1-x) - c w_x^e(1-x) \end{bmatrix}$ of system (5) satisfies $\chi_t^e = 0$, $w_t^e = \Omega_e$. It has the following form: $\chi^e(x) = \Omega_e \begin{bmatrix} 1 - c\tilde{k}x \\ 1 + c\tilde{k}(1-x) \end{bmatrix}$. Therefore, a feedforward open-loop control is introduced as:

$$u_1^e = \Omega_e \left(1 + \tilde{k}g^{-1}\right), \qquad u_2^e = -\tilde{e}_1 b^{-1}. \tag{6}$$

Introducing the error variables $\tilde{\chi}(x,t) = \chi(x,t) - \chi^e(x)$, $\tilde{u}_1(t) = u_1(t) - u_1^e$ and $\tilde{u}_2(t) = u_2(t) - u_2^e$, the aim is to show the exponential stability of $\tilde{\chi}$ to 0 in order to get $w_t \to \Omega_e$ and $\|Y\| \to 0$. The inputs $\tilde{u}_1$ and $\tilde{u}_2$ are assumed to be the results of a strictly proper dynamic controller whose inputs are $w_t(0,t), w_t(1,t)$ and Y. That means that the measurements are these three variables but it is not possible to apply exactly $w_t(1)$ or $w_t(0)$, corresponding to the situation where the actuator is bandwidth limited for instance. This assumption is important as the wave can be seen as a neutral system [1] and using directly w_t means that we can affect directly the neutral part. This phenomena is known to be absolutely non-robust [12] to small delay for example. Assuming the controller is of order n, it is written for $t \geqslant 0$:

$$\begin{cases} \dot{X}_c(t) = A_c X_c(t) + B_{c1} Y(t) + B_{c2} \begin{bmatrix} w_t(1,t) \\ w_t(0,t) \end{bmatrix}, \\ \tilde{u}_1(t) = C_1 \begin{bmatrix} X_c(t) \\ Y(t) \end{bmatrix}, \\ \tilde{u}_2(t) = C_2 X_c(t) + KY(t). \end{cases}$$

with $C_1, C_2 \in \mathbb{R}^{1\times(n+2)}, A_c \in \mathbb{R}^{n\times n}, B_{c1}, B_{c2} \in \mathbb{R}^{n,2}$ and $K \in \mathbb{R}^{1\times 2}$. The closed-loop system in Riemann coordinates

can be rewritten as:

$$\begin{cases} \tilde{\chi}_t(x,t) = c\tilde{\chi}_x(x,t), \\ \begin{bmatrix} 1-cg & 0 \\ 0 & 1-c\tilde{k} \end{bmatrix} \tilde{\chi}(0,t) = \begin{bmatrix} 0 & 1+cg \\ 1+c\tilde{k} & 0 \end{bmatrix} \tilde{\chi}(1,t) - \begin{bmatrix} 2cgC_1X(t) \\ 0 \end{bmatrix}, \\ \dot{X}(t) = \tilde{A}X(t) + \tilde{B} \begin{bmatrix} \tilde{\chi}(1,t) \\ \tilde{\chi}(0,t) \end{bmatrix}, \end{cases} \tag{7}$$

with initial conditions $\tilde{\chi}(x,0) = \tilde{\chi}_0(x), X(0) = X^0$, $X^\top = \begin{bmatrix} X_c^\top & Y^\top \end{bmatrix}^\top$ and

$$\tilde{A} = \begin{bmatrix} A_c & B_{c1} \\ BC_2 & A+BK \end{bmatrix}, \qquad \tilde{B} = \frac{1}{2} \begin{bmatrix} B_{c2} \\ \tilde{E}_1 \ 0_{2,1} \end{bmatrix} \begin{bmatrix} 1 & 0 \\ 0 & 1 \\ 0 & 1 \\ 1 & 0 \end{bmatrix}^\top.$$

Remark 1: From now on, to ease the reading, the parameter t may be omitted and $\tilde{\chi}$ refers to a solution of (7).

B. Existence and uniqueness

The existence and uniqueness follows the same lines than in [2]. Define the following set: $\mathcal{H}^m = \mathbb{R}^{n+2} \times H^m \times H^m$ with $m \in \mathbb{N}$. The space $\mathcal{H} = \mathcal{H}^0$ can be equipped with the following norm:

$$\forall (X,\chi) \in \mathcal{H}, \quad \|(X,\chi)\|_{\mathcal{H}} = |X|^2 + \tfrac{1}{2}\|\chi\|^2 = |X|^2 + c^2\|w_x\|^2 + \|w_t\|^2.$$

Using the operator notation [22], system (7) is formulated as follows:

$$T\begin{pmatrix} X \\ \chi \end{pmatrix} = \begin{pmatrix} \tilde{A}X + \tilde{B}\begin{bmatrix} \chi(1) \\ \chi(0) \end{bmatrix} \\ c\chi \end{pmatrix}, \text{ and } T : \mathcal{D}(T) \to \mathcal{H},$$

with

$$\mathcal{D}(T) = \Big\{ (X,\chi) \in \mathcal{H}^1, \begin{bmatrix} 1-cg & 0 \\ 0 & 1-c\tilde{k} \end{bmatrix} \chi(0) = \begin{bmatrix} 0 & 1+cg \\ 1+c\tilde{k} & 0 \end{bmatrix} \chi(1) - \begin{bmatrix} 2cgC_1X \\ 0 \end{bmatrix} \Big\}.$$

The existence of a continuous solution for $(X^0,\chi_0) \in \mathcal{D}(T)$ is ensured by applying Lumer-Philips theorem (for example in [22, p.103]) whose conditions are recalled below:

1) there exists a function $V : \mathcal{H} \to \mathbb{R}^+$ such that its derivative along the trajectories of (7) is negative;
2) there exists λ sufficiently small such that $\mathcal{D}(T) \subseteq \mathcal{R}(\lambda I - T)$ where $\mathcal{R}$ is the range operator.

The first condition relies on the existence of a Lyapunov functional and is therefore the subject of the following part. The second statement needs some calculations very similar to the one conducted in [2] or [16]. For a given $\lambda > 0$, let $(r,f) \in \mathcal{D}(T)$, the aim is to prove the existence of $(X,\chi) \in \mathcal{D}(T)$ satisfying the following for $x \in (0,1)$:

$$\begin{cases} \lambda X - \tilde{A}X - \tilde{B}\begin{bmatrix} \chi(1) \\ \chi(0) \end{bmatrix} = r, \\ \lambda\chi(x) - c\chi_x(x) = f(x). \end{cases}$$

That leads to $\chi(x) = k_1 e^{\lambda\frac{x}{c}} + F(x)$ with $F(x) = c^{-1}\int_0^x e^{\lambda\frac{x-s}{c}} f(s)ds \in H^1$ and $k_1 = \mathrm{diag}(k_{11},k_{12})$, $k_{11}, k_{12} \in \mathbb{R}$. Using the boundary conditions, we get a system of two equations:

$$\begin{aligned} (1-cg)k_1 &= k_2 e^{\frac{\lambda}{c}}(1+cg)(A+F(1)) - \tfrac{2cg}{\lambda}C_1X, \\ (1-c\tilde{k})k_2 &= k_1 e^{\frac{\lambda}{c}}(1+c\tilde{k})(A+F(1)) \end{aligned}$$

Since there exists a λ such that $\tilde{A} + \tilde{B}\begin{bmatrix} \chi(1) \\ \chi(0) \end{bmatrix}$ is not the null matrix, then this system has a unique solution for a given X that ends the proof of existence.

III. Exponential Stability of the Drilling Pipe

A. Main result

The main result of this paper is the α-stability criterion for system (7) expressed in terms of LMIs, therefore easily tractable. Let us first define the α-stability.

Definition 1: System (7) is α-stable (or exponentially stable with a decay-rate of at least α) with respect to the norm $\|\cdot\|_{\mathcal{H}}$ if there exists $\gamma \geqslant 1$ such that the following holds for (X^0,χ_0) the initial condition:

$$\|(X(t),\chi(\cdot,t))\|_{\mathcal{H}} \leqslant \gamma\|(X^0,\chi_0)\|_{\mathcal{H}} e^{-\alpha t}.$$

Considering this definition, we propose a stability theorem for system (7).

Theorem 1: Let $N > 0$. Assume there exists $P_N \in \mathbb{S}_+^{n+2+2(N+1)}$, $R, S \in \mathbb{S}_+^2$ such that the following LMI holds:

$$\Psi_{N,\alpha} - R_N \prec 0, \tag{8}$$

with

$$\begin{aligned} \Psi_{N,\alpha} &= \mathrm{He}((Z_N + \alpha F_N)^\top P_N F_N) - cG_N^\top S G_N \\ &\quad + cH_N^\top (S+R) H_N e^{\frac{2\alpha}{c}}, \\ F_N &= \begin{bmatrix} I_{n+2+2(N+1)} & 0_{n+2+2(N+1),2} \end{bmatrix}, \\ Z_N &= \begin{bmatrix} \mathcal{N}_N^\top & \mathcal{Z}_N^\top \end{bmatrix}^\top, \quad \mathcal{N}_N = \begin{bmatrix} \tilde{A} & 0_{n+2,2(N+1)} & \tilde{B} \end{bmatrix}, \\ \mathcal{Z}_N &= c\mathbb{1}_N H_N - c\bar{\mathbb{1}}_N G_N - \begin{bmatrix} 0_{2(N+1),n+2} & L_N & 0_{2(N+1),2} \end{bmatrix}, \\ G_N &= \begin{bmatrix} -cgC_1 & 0_{2,2(N+1)} & G \\ 0_{1,n+2} & & \end{bmatrix}, \quad G = \begin{bmatrix} 0 & 1+cg \\ 1+c\tilde{k} & 0 \end{bmatrix}, \\ H_N &= \begin{bmatrix} 0_{1,n+2} & 0_{2,2(N+1)} & H \\ cgC_1 & & \end{bmatrix}, \quad H = \begin{bmatrix} 1-c\tilde{k} & 0 \\ 0 & 1-cg \end{bmatrix}, \\ R_N &= \mathrm{diag}(0_n, R, 3R, \cdots, (2N+1)R, 0_2), \end{aligned} \tag{9}$$

$$L_N = \begin{bmatrix} \ell_{0,0}I_2 & \cdots & 0_2 \\ \vdots & \ddots & \vdots \\ \ell_{N,0}I_2 & \cdots & \ell_{N,N}I_2 \end{bmatrix}, \ \mathbb{1}_N = \begin{bmatrix} I_2 \\ \vdots \\ I_2 \end{bmatrix}, \ \bar{\mathbb{1}}_N = \begin{bmatrix} I_2 \\ \vdots \\ (-1)^N I_2 \end{bmatrix},$$

and $\ell_{k,j} = (2j+1)(1-(-1)^{j+k})$ if $j \leqslant k$ and 0 otherwise. Then system (7) is α-exponentially stable.

The proof of this theorem relies on the construction of a Lyapunov functional described in the following subsections.

Remark 2: A necessary condition for (8) to be fulfilled is that the last 2×2 diagonal bloc of (8) must be definite negative corresponding to the following inequality:

$$H^\top(S+R)He^{2\frac{\alpha}{c}} - G^\top SG \prec 0.$$

This condition implies:

$$\alpha \leqslant \alpha_{max} = \max\left(\frac{c}{2}\log\left|\frac{(c\tilde{k}+1)(cg+1)}{(c\tilde{k}-1)(cg-1)}\right|, 0\right). \quad (10)$$

Setting $g = 0$ or $\tilde{k} = 0$ leads to the same maximal decay-rate than in [1], [3], [9]. This condition is also related to the τ-stabilization which is a common phenomenon when considering a wave equation [17]. One can notice that for $g > 0$ and $\tilde{k} > 0$, the PDE system itself is asymptotically stable, because the two boundary conditions are adding damping. Notice that if one of them is negative, there exist also values of the other coefficient making the system asymptotically stable. Note also that for $g = 1$ or $\tilde{k} = 1$ leads to $\alpha_{max} = +\infty$ meaning there is no neutral part and the system resumes to a time-delay system.

Remark 3 (Hierarchy): Define the following set:

$$\mathcal{C}_N = \{\alpha \geqslant 0 \mid \Psi_{N,\alpha} - R_N \prec 0, P_N \succ 0, R \succ 0, S \succ 0\},$$

and assume this set is not empty. Then, denote $\alpha_N = \sup \mathcal{C}_N$. The hierarchy property states that $\alpha_{N+1} \geqslant \alpha_N$. This can be proved using the same strategy than in [2], [18].

B. Proof of Theorem 1

1) Preliminaries: The main contribution of this paper relies on the extensive use of Bessel inequality to encompass traditional results. Before stating this inequality, we need to introduce an orthonormal family. The definition is as follows:

Definition 2 (Legendre polynomials): Let $N \in \mathbb{N}$, the family of Legendre polynomials of degree less than or equal to N is denoted by $\{\mathcal{L}_k\}_{k\in[0,N]}$ with

$$\mathcal{L}_k(x) = (-1)^k \sum_{l=0}^{k} (-1)^l \binom{k}{l}\binom{k+l}{l} x^l$$

with $\binom{k}{l} = \frac{k!}{l!(k-l)!}$.

The sequence $\{\mathcal{L}_k\}$ is made up of "shifted"-Legendre polynomials on $[0, 1]$. As seen in [5], [8], [21], this family is orthonormal in L^2 with the canonical inner product. That leads to the following definition.

Definition 3: Let $\chi \in L^2$. The projection of χ on the kth Legendre polynomials is defined as follows:

$$\mathfrak{X}_k := \int_0^1 \chi(x)\mathcal{L}_k(x)dx.$$

The Bessel inequality is obtained considering the previous definitions and the orthogonal property of the shifted-Legendre family.

Lemma 1 (Bessel Inequality): For any function $\chi \in L^2$ and symmetric positive matrix $R \in \mathbb{S}^2_+$, the following Bessel-like integral inequality holds for all $N \in \mathbb{N}$:

$$\int_0^1 \chi^\top(x)R\chi(x)dx \geqslant \sum_{k=0}^{N}(2k+1)\mathfrak{X}_k^\top R\mathfrak{X}_k. \quad (11)$$

This lemma and its short proof can be seen in [2].

The derivation of χ_k along time is needed in the sequel. Lemma 3 from [2] deals with this issue.

Lemma 2: For any function $\chi \in L^2$, the following expression holds for any N in $\mathbb{N}$ using notations (9):

$$\begin{bmatrix}\dot{\mathfrak{X}}_0\\ \vdots \\ \dot{\mathfrak{X}}_N\end{bmatrix} = c\mathbb{1}_N\chi(1) - c\bar{\mathbb{1}}_N\chi(0) - cL_N\begin{bmatrix}\mathfrak{X}_0\\ \vdots \\ \mathfrak{X}_N\end{bmatrix}.$$

The link between α-exponential stability and a Lyapunov functional is made by the following lemma.

Lemma 3: Let V be a Lyapunov functional for system (7) and $\alpha \geq 0$. Assume there exist $\varepsilon_1, \varepsilon_2, \varepsilon_3 > 0$ such that the following holds for all $t \geqslant 0$:

$$\begin{cases} \varepsilon_1\|(X,\chi)\|^2_{\mathcal{H}} \leqslant V(X,\chi) \leqslant \varepsilon_2\|(X,\chi)\|^2_{\mathcal{H}}, \\ \dot{V}(X,\chi) + 2\alpha V(X,\chi) \leqslant -\varepsilon_3\|(X,\chi)\|^2_{\mathcal{H}}, \end{cases} \quad (12)$$

then system (7) is α-exponentially stable.

Proof. Inequalities (12) bring the following: $\dot{V}(X,w) + \left(\alpha + \frac{\varepsilon_3}{\varepsilon_2}\right)V(X,\chi) \leqslant 0$. Then integrating this inequality between 0 and t leads to:

$$\|(X(t),\chi(t))\|^2_{\mathcal{H}} \leqslant \frac{\varepsilon_2}{\varepsilon_1}\|(X^0,\chi_0)\|^2_{\mathcal{H}}e^{-2\alpha t}.$$

■

Once these useful lemmas reminded, a Lyapunov functional can be defined.

2) Lyapunov functional candidate: The aim of this subpart is to build a Lyapunov functional candidate for system (7). Following the same methodology than introduced in [2], a first Lyapunov functional $\mathcal{V}_\alpha$ for the PDE part is defined with $S, R \in \mathbb{S}^2_+$:

$$\mathcal{V}_\alpha(\chi) = \int_0^1 e^{2\frac{\alpha x}{c}}\chi^\top(x)(S+xR)\chi(x)dx,$$

The Lyapunov functional candidate is then the summation of a quadratic term and $\mathcal{V}_\alpha$. This quadratic term contains the stability of state X but also some terms merging the ODE and the PDE. This is done to enlarge the stability analysis, enabling the study of stability of the whole interconnected system and not of each subsystem independently. This technique, as shown in [2], is well-suited for the study of an unstable ODE coupled with a PDE for instance. The total Lyapunov function of order $N \in \mathbb{N}$ is then:

$$V_{N,\alpha}(X,\chi) = X_N^\top P_N X_N + \mathcal{V}_\alpha(\chi) \quad (13)$$

with $P_N \in \mathbb{S}^{n+2+2(N+1)}_+$ and $X_N = \begin{bmatrix}X^\top & \mathfrak{X}_0^\top & \dots & \mathfrak{X}_N^\top\end{bmatrix}^\top$.

The aim now is to prove the existence of $\varepsilon_1, \varepsilon_2$ and $\varepsilon_3 > 0$ to apply Lemma 3 on the functional $V_{N,\alpha}$ and then conclude the proof.

3) Existence of ε_1: Conditions $P_N \succ 0$ and $S, R \in \mathbb{S}^2_+$ mean that there exists $\varepsilon_1 > 0$, such that for all $x \in [0, 1]$:

$$P_N \succeq \varepsilon_1 \mathrm{diag}\left(I_{n+2}, 0_2\right),$$
$$S + xR \succeq S \succeq \tfrac{\varepsilon_1}{2}I_2.$$

These inequalities imply:

$$\begin{aligned} V_{N,\alpha}(X,w) &\geqslant \varepsilon_1\left(|X|^2 + \tfrac{1}{2}\|\chi\|^2\right) \\ &\quad + \textstyle\int_0^1 \chi^\top(x)\left(S + xR - \tfrac{\varepsilon_1}{2}I_2\right)\chi(x)dx \\ &\geqslant \varepsilon_1\left(|X|^2_n + \tfrac{1}{2}\|\chi\|^2\right) \geqslant \varepsilon_1\|(X,\chi)\|^2_{\mathcal{H}}. \end{aligned}$$

4) Existence of ε_2: Since P_N, S and R are definite positive matrices, there exists $\varepsilon_2 > 0$ such that:

$$P_N \preceq \text{diag}\left(\varepsilon_2 I_{n+2}, \tfrac{\varepsilon_2}{4}\text{diag}\left\{(2k+1)I_n\right\}_{k\in(0,N)}\right),$$
$$(S+xR) \preceq S+R \preceq \tfrac{\varepsilon_2}{4}e^{-2\frac{\alpha}{c}}I_2, \quad \forall x\in(0,1).$$

Then, we get:

$$V_{N,\alpha}(X,\chi) \leqslant \varepsilon_2|X|^2+\frac{\varepsilon_2}{4}\left(\sum_{k=0}^{N}(2k+1)\mathfrak{X}_k^\top\mathfrak{X}_k+\|\chi\|^2\right)$$
$$\leqslant \varepsilon_2\left(|X|^2+\tfrac{1}{2}\|\chi\|^2\right)=\varepsilon_2\|(X,\chi)\|_{\mathcal{H}}^2.$$

The inequality comes from Bessel inequality (11).

5) Existence of ε_3: This part is the most important and shows that system (7) is dissipative [2], [22]. Differentiating with respect to time (13) along the trajectories of system (7) leads to:

$$\dot{V}_{N,\alpha}(X,w)=\text{He}\left(\begin{bmatrix}\dot{X}\\ \dot{\mathfrak{X}}_0\\ \vdots\\ \dot{\mathfrak{X}}_N\end{bmatrix}^\top P_N\begin{bmatrix}X\\ \mathfrak{X}_0\\ \vdots\\ \mathfrak{X}_N\end{bmatrix}\right)+\dot{\mathcal{V}}_\alpha(w).$$

The goal here is to find an upper bound of $\dot{V}_{N,\alpha}$ using the extended state: $\xi_N=\begin{bmatrix}X_N^\top & w_t(1) & w_t(0)\end{bmatrix}^\top$. The first step is to derive an expression of $\dot{\mathcal{V}}_\alpha$. Similarly to [2], we get:

$$\begin{aligned}\dot{\mathcal{V}}_\alpha(\chi)&=2c\int_0^1\chi_x^\top(x)(S+xR)\chi(x)e^{2\frac{\alpha x}{c}}dx\\ &=2c\left(\chi^\top(1)(S+R)\chi(1)e^{2\frac{\alpha}{c}}-\chi^\top(0)S\chi(0)\right.\\ &\quad\left.-\int_0^1\chi^\top(x)R\chi(x)e^{2\frac{\alpha x}{c}}dx\right)-4\alpha\mathcal{V}_\alpha(\chi)-\dot{\mathcal{V}}_\alpha(\chi)\\ &=c\left(\chi^\top(1)(S+R)\chi(1)e^{2\frac{\alpha}{c}}-\chi^\top(0)S\chi(0)\right.\\ &\quad\left.-\int_0^1\chi^\top(x)R\chi(x)e^{-2\frac{\alpha x}{c}}dx\right)-2\alpha\mathcal{V}_\alpha(\chi).\end{aligned}$$

Using the previous equation, Lemma 2 and equation (4), we note that $X_N = F_N\xi_N,\ \dot{X}_N = Z_N\xi_N,\ \chi(0) = G_N\xi_N,\ \chi(1)=H_N\xi_N$ where matrices F_N, Z_N, H_N, G_N are given in (9). Then we can write:

$$\dot{V}_{N,\alpha}(X,\chi)=\xi_N^\top\Psi_{N,\alpha}\xi_N+c\sum_{k=0}^{N}\mathfrak{X}_k^\top(2k+1)R\mathfrak{X}_k$$
$$-c\int_0^1\chi^\top(x)R\chi(x)e^{2\frac{\alpha x}{c}}dx-2\alpha V_{N,\alpha}(X,\chi).$$

Denoting by $W_{N,\alpha}(X,\chi)=\dot{V}_{N,\alpha}(X,\chi)+2\alpha V_{N,\alpha}(X,\chi)$, the previous equality implies the following upper bound:

$$W_{N,\alpha}(X,\chi)\leqslant\xi_N^\top\Psi_{N,\alpha}\xi_N+c\sum_{k=0}^{N}(2k+1)\mathfrak{X}_k^\top R\mathfrak{X}_k$$
$$-c\int_0^1\chi^\top(x)R\chi(x)dx. \quad (14)$$

Since $R\succ 0$ and $\Psi_{N,\alpha}\prec 0$, there exists $\varepsilon_3>0$ such that:

$$\begin{aligned}R &\succeq \tfrac{\varepsilon_3}{2}I_2,\\ \Psi_{N,\alpha} &\preceq -\varepsilon_3\text{diag}\left(I_{n+2},\tfrac{1}{2}I_2,\tfrac{3}{2}I_2,\dots,\tfrac{2N+1}{2}I_2,0_2\right).\end{aligned} \quad (15)$$

Using (15) and Bessel's inequality, equation (14) becomes:

$$W_{N,\alpha}(X,\chi)\leqslant-\varepsilon_3\left(|X|^2+\frac{1}{2}\|\chi\|^2\right)\leqslant-\varepsilon_3\ \|(X,\chi)\|_{\mathcal{H}}^2,$$

and that concludes the proof.

IV. Examples and discussion

In this section, we illustrate the proposed theorem by using values taken from [19], [20] and shown in Table I. The simulation is based on a finite-difference method of order 2. The two cases under study here are summarized below:

1) the feedforward control with $n=0$ (using only u_1^e and u_2^e in (6)) and

$$C_1=\begin{bmatrix}0 & 0\end{bmatrix},\quad C_2=0,\quad K=\begin{bmatrix}0 & 0\end{bmatrix}. \quad (16)$$

2) a dynamic control with the following parameters:

$$\tilde{A}=\begin{bmatrix}-100 & -2500 & 0\\ 1 & 0 & 0\\ 0 & 0 & -10\end{bmatrix},\quad B_1=0_{3,2},\quad B_2=\begin{bmatrix}0 & 974\\ 0 & 0\\ 1 & 0\end{bmatrix},$$
$$C_1=\begin{bmatrix}0 & 974 & -2 & 0 & 0\end{bmatrix},\quad C_2=0_{1,3},\quad K=\begin{bmatrix}-92.2 & 5.02\end{bmatrix}. \quad (17)$$

The dynamic controller is obtained considering two low-pass filters. Considering s being the Laplace variable, the transfer functions of the two low-pass filters are $\frac{u_1}{w_t(0)}=\frac{gc-5.9}{(1+s\omega_{c1})^2}$ and $\frac{u_1}{w_t(1)}=\frac{-0.2}{1+\omega_{c2}}$ with the cut-off frequencies $\omega_{c1}=50$ and $w_{c2}=10$. Gain K has been chosen such that the eigenvalues of $A+BK$ are $-1.3\pm 0.22i$.

With the feedforward controller only, it is possible to estimate the decay-rate of the solution. Indeed, there is no real coupling between the ODE and the PDE and the decay-rate of the interconnected system will be the smallest between their respective ones. Here, the PDE has a decay-rate given by equation (10) of 1.08 and the ODE is 0.2159. The results of Theorem 1 is given in Table II. The maximum decay-rate for the feedforward case is obtained for $N\geqslant 1$ and is, as expected, the decay-rate of the ODE.

Figure 2 shows the time response of system (7) in the two cases. The initial state for this computation is $X^0=0, w(x,0)=2-\Omega_e\tilde{k}x$ and $w_t(x,0)=\Omega_e\left(x-\tilde{k}g^{-1}(1-x)\right)$ for $x\in(0,1)$. Of course states X_1 and X_2 are much faster, which results from the direct influence of static feedback gain K but also the speed $w_t(1)$, which is more regular and converges faster to 0. Indeed, as shown in Table II, the speed is much faster in the situation with the dynamic control. The hierarchy of Remark 3 is clearly visible and reaches its maximum value at $N=3$. One of the drawback of such a system is the angular speed $w_t(x,\cdot)$ for $x\in(0,1)$, which increases significantly compared to the first case.

Remark 4: A backstepping control law could have been considered with a target system of arbitrary large decay-rate. Compared to this method, the price to pay for a finite dimension controller is seen by equation (10). Indeed, it is not possible to accelerate the system with an arbitrary large decay-rate. Other differences are that there is no design methodology using LMI yet and the control is a finite-dimension state-feedback using the knowledge of only Y, $w_t(0)$ and $w_t(1)$ with strictly proper controllers.

V. Conclusion

We have studied the stability of a drilling mechanism, which dynamics can be modeled as a coupled ODE/PDE. Approximating this model around a desired equilibrium point leads to an interconnected ODE / damped wave equation.

Symbol	Value	Symbol	Value
c	2.6892 m.s^{-2}	Ω_e	10 rad.s^{-1}
$\tilde{k}$	1.50 s.m^{-1}	g	2.48 s.m^{-1}
A_{21}	-41.58 s^{-2}	A_{22}	-0.43 s^{-1}
$\tilde{e}_1$	-8.35 m.s^{-1}.rad^{-1}	b	-0.43 s^{-1}

TABLE I

COEFFICIENT VALUES TAKEN FOR THE SIMULATIONS.

Type of control	$N=0$	$N=1$	$N=2$	$N=3$	α_{max}
Feedforward	0.2157	0.2159	0.2159	0.2159	1.0842
Dynamic	0.312	0.953	1.083	1.084	1.0842

TABLE II

MAXIMUM DECAY-RATE α USING THEOREM 1 AT AN ORDER N. THE FEEDFORWARD CONTROLLED SYSTEM REFERS TO (16) WHILE THE DYNAMIC CONTROLLED ONE IS WITH (17). THE LAST COLUMN α_{max} IS CALCULATED USING (10).

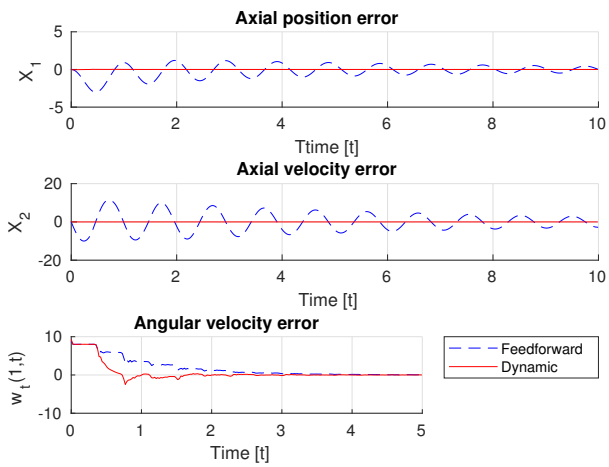

Fig. 2. Simulation on the feedforward and dynamic controlled system.

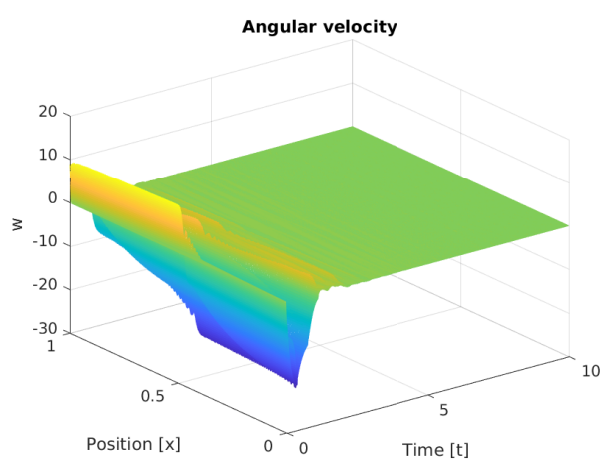

Fig. 3. Angle velocity error in the situation with dynamic control.

Therefore, The stability of this coupled system is studied using a Lyapunov approach and the stability condition of such a system has been expressed in terms of LMI. Using Bessel inequality, we provided a hierarchy of LMI conditions for this kind of interconnected system with linear feedback controllers. Using only strictly proper hand-designed controllers, a control law has been derived improving subsequently the decay-rate of the system. Further studies would investigate how to automatically design such controllers.

REFERENCES

[1] M. Barreau, F. Gouaisbaut, A. Seuret, and R. Sipahi. Input / output stability of a damped string equation coupled with ordinary differential system. Working paper, available on HAL, 2018.

[2] M. Barreau, A. Seuret, F. Gouaisbaut, and L. Baudouin. Lyapunov stability analysis of a string equation coupled with an ordinary differential system. *IEEE Trans. Automatic Control*, 2018. available on HAL.

[3] G. Bastin and J.-M. Coron. *Stability and boundary stabilization of 1-d hyperbolic systems*, volume 88. Springer, 2016.

[4] L. Baudouin, A. Seuret, and F. Gouaisbaut. Lyapunov stability analysis of a linear system coupled to a heat equation. In *20th IFAC World Congress, Toulouse*, volume 50, pages 11978 – 11983, 2017.

[5] L. Baudouin, A. Seuret, and M. Safi. Stability analysis of a system coupled to a transport equation using integral inequalities. volume 49, pages 92 – 97, 2016. 2nd IFAC Workshop on Control of Systems Governed by Partial Differential Equations (CPDE).

[6] D. Bresch-Pietri and M. Krstic. Output-feedback adaptive control of a wave PDE with boundary anti-damping. *Automatica*, 50(5):1407–1415, 2014.

[7] N. Challamel. Rock destruction effect on the stability of a drilling structure. *Journal of sound and vibration*, 233(2):235–254, 2000.

[8] R. Courant and D. Hilbert. *Methods of mathematical physics*. John Wiley & Sons, Inc., 1989.

[9] R Datko. Two questions concerning the boundary control of certain elastic systems. *Journal of Differential Equations*, 92(1):27–44, 1991.

[10] E. Fridman, S. Mondié, and B. Saldivar. Bounds on the response of a drilling pipe model. *IMA Journal of Mathematical Control and Information*, 27(4):513–526, 2010.

[11] Emilia Fridman. *Introduction to Time-Delay Systems*. Analysis and Control. Birkhäuser, 2014.

[12] J. K. Hale and S. M. V. Lunel. Effects of small delays on stability and control. In *Operator theory and analysis*, pages 275–301. Springer, 2001.

[13] W. He, S. Zhang, and S. S. Ge. Adaptive control of a flexible crane system with the boundary output constraint. *IEEE Transactions on Industrial Electronics*, 61(8):4126–4133, 2014.

[14] M. Krstic. *Delay compensation for nonlinear, adaptive, and PDE systems*. Springer, 2009.

[15] M. Krstic and A. Smyshlyaev. *Boundary control of PDEs: A course on backstepping designs*, volume 16. Siam, 2008.

[16] Ö. Morgül. A dynamic control law for the wave equation. *Automatica*, 30(11):1785–1792, 1994.

[17] N. Olgac and R. Sipahi. A practical method for analyzing the stability of neutral type LTI-time delayed systems. *Automatica*, 40(5):847–853, 2004.

[18] M. Safi, L. Baudouin, and A. Seuret. Tractable sufficient stability conditions for a system coupling linear transport and differential equations. *Systems & Control Letters*, 110:1 – 8, 2017.

[19] B. Saldivar, I Boussaada, H. Mounier, and S.-I. Niculescu. *Analysis and Control of Oilwell Drilling Vibrations: A Time-Delay Systems Approach*. Springer, 2015.

[20] B. Saldivar, S. Mondié, and J. C. Ávila Vilchis. The control of drilling vibrations: A coupled PDE-ODE modeling approach. *International Journal of Applied Mathematics and Computer Science*, 26(2):335–349, 2016.

[21] A. Seuret and F. Gouaisbaut. Hierarchy of LMI conditions for the stability analysis of time delay systems. *Systems & Control Letters*, 81:1–7, 2015.

[22] M. Tucsnak and G. Weiss. *Observation and control for operator semigroups*. Springer, 2009.

[23] H.-N. Wu and J.-W. Wang. Static output feedback control via PDE boundary and ODE measurements in linear cascaded ODE-beam systems. *Automatica*, 50(11):2787–2798, 2014.